Centre Number	Candidate Number	Name

CAMBRIDGE INTERNATIONAL EXAMINATIONS
International General Certificate of Secondary Education

PHYSICS **0625/02**

Paper 2

May/June 2003

1 hour

Candidates answer on the Question Paper.
No Additional Materials are required.

READ THESE INSTRUCTIONS FIRST

Write your Centre number, candidate number and name on all the work you hand in.
Write in dark blue or black pen in the spaces provided on the Question Paper.
You may use a soft pencil for any diagrams, graphs or rough working.
Do not use staples, paper clips, highlighters, glue or correction fluid.

Answer **all** questions.
At the end of the examination, fasten all your work securely together.
The number of marks is given in brackets [ ] at the end of each question or part question.
You may lose marks if you do not show your working or if you do not use appropriate units.
Take the weight of 1 kg to be 10 N (i.e. acceleration of free fall = 10 m/s^2).

If you have been given a label, look at the details. If any details are incorrect or missing, please fill in your correct details in the space given at the top of this page.

Stick your personal label here, if provided.

For Examiner's Use

This document consists of **16** printed pages.

SP (AT/KN) S46409/2
© CIE 2003

UNIVERSITY of CAMBRIDGE
Local Examinations Syndicate

[Turn over

www.root19.com +91 - 9969 353 391

For Examiner's Use

1 A person winds some thread tightly 4 times round the length of a metre rule and cuts the ends off level with the left-hand end of the rule, as shown in Fig. 1.1.

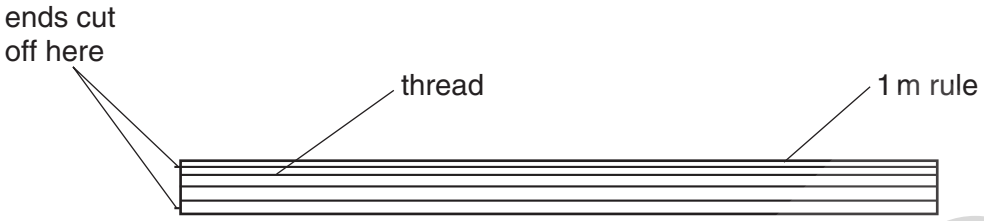

Fig. 1.1

(a) To the nearest metre, what is the length of the thread?

..... m [1]

(b) Is the actual length of thread slightly greater or slightly less than your answer to **(a)**? Tick one box and give your reason.

slightly greater ☐ slightly less ☐

reason .....

.....[1]

ROOT 19

For Examiner's Use

2 **(a)** Two horizontal strings are attached to a soft rubber ball, as shown in Fig. 2.1.

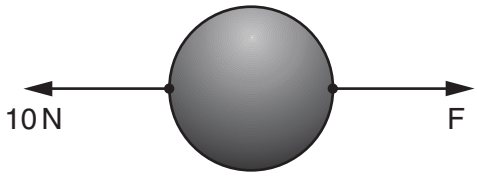

Fig. 2.1

A force of 10 N pulls on one string.

(i) The ball does not move. What is the value of the force F on the other string?

F = ... N

(ii) What change to the rubber ball do the two forces cause?

.....

[2]

(b) A garden pot containing soil weighs a total of 360 N. The pot rests on three equally-spaced blocks, so that surplus water can drain out of the holes in the base of the pot. The soil is uniformly distributed in the pot. The pot is shown in Fig. 2.2.

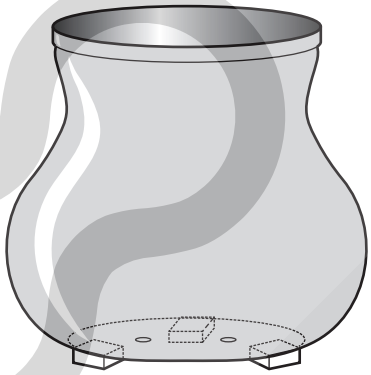

Fig. 2.2

(i) What is the force exerted by each block on the pot? .....N

(ii) State the direction of these forces.

.....

(iii) The gardener finds that the blocks sink into the ground, but he must have the pot up on blocks to allow the drainage. What can he do to reduce the sinking of the pot?

.....

[3]

3 **(a)** An unopened bottle of olive oil has a mass of 0.97 kg. The empty bottle has a mass of 0.51 kg.
Calculate the mass of the olive oil.

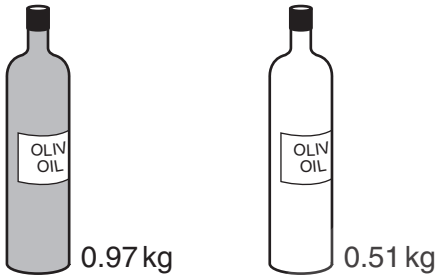

Fig. 3.1

mass of olive oil = ... kg [2]

(b) The olive oil is poured into three 250 cm^3 measuring cylinders. The first two cylinders are filled to the 250 cm^3 mark. The third is shown in Fig. 3.2.

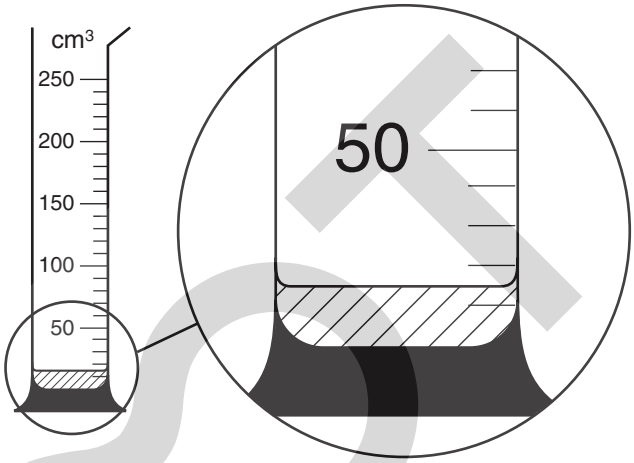

Fig. 3.2

(i) What is the volume of the olive oil in the third measuring cylinder?

volume = ... cm^3

(ii) Calculate the volume of the olive oil in the unopened bottle.

volume = ... cm^3

(iii) Calculate the density of the olive oil. Express your answer to 2 significant figures.

density = ...
[7]

For Examiner's Use

4 The air trapped in a cylinder by a piston is kept under pressure by a load, as shown in Fig. 4.1.

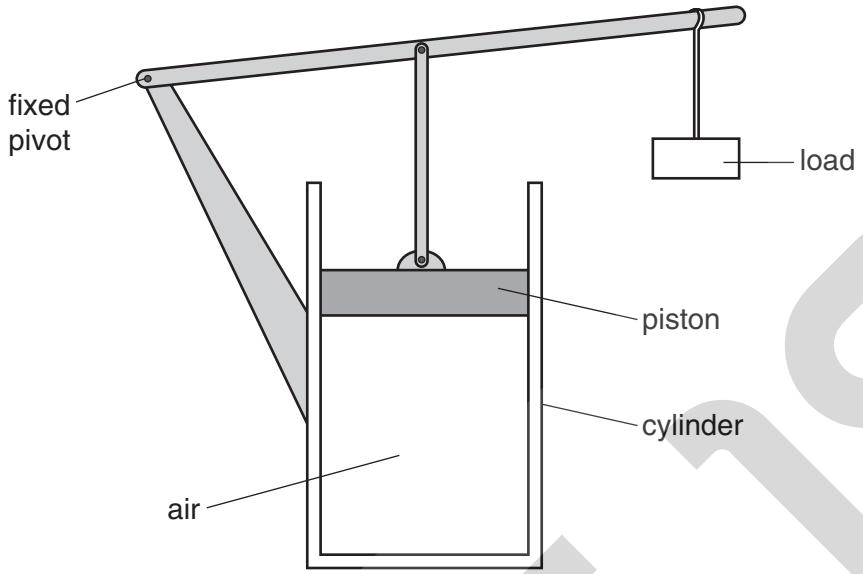

Fig. 4.1

(a) Describe how the pressure in the cylinder is caused by the air molecules.

.....

.....

.....[3]

(b) The load is increased.

(i) State what happens to the piston.

.....

(ii) State what happens to the pressure in the cylinder, and give a reason.

what happens .....

.....

reason .....

.....

[3]

5 An immersion heater is put into some crushed ice at 0 °C. The immersion heater is switched on.

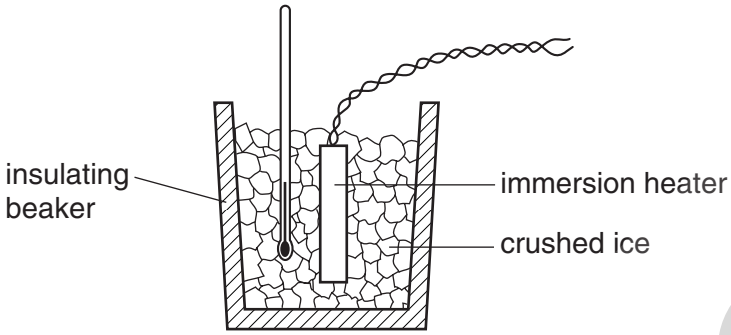

Fig. 5.1

(a) On Fig. 5.2, sketch the graph of temperature against time, up to the time when all the ice has melted. [3]

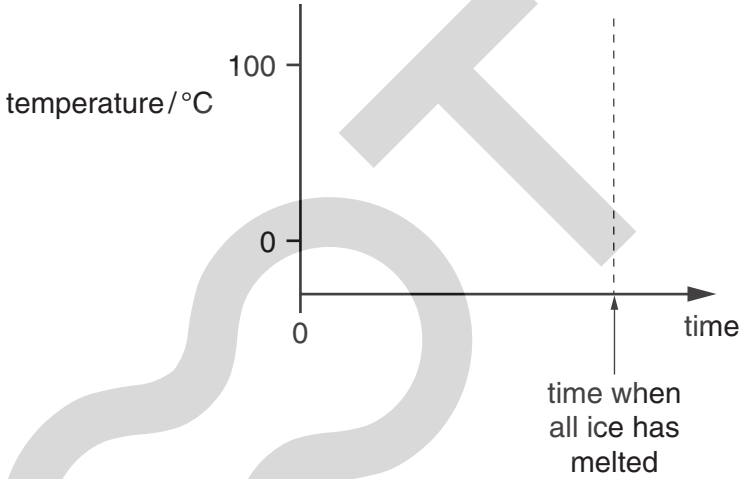

Fig. 5.2

(b) The heater is left switched on after all the ice has melted, and the temperature rises. After some time, the temperature stops rising, even though the heater is still on.

(i) Suggest why the temperature stops rising, even though the heater is still on.

.....

.....

(ii) State what happens to the energy received by the water whilst this is happening.

.....

.....
[2]

6 In this question, drawing should be done carefully.

Fig. 6.1 shows a ray of light striking mirror 1 at point X.

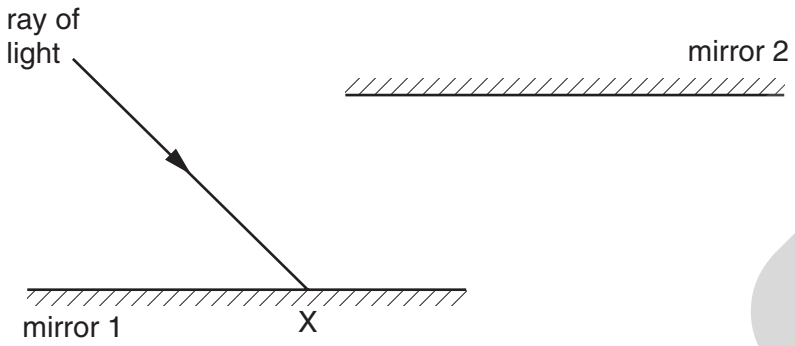

Fig. 6.1

(a) On Fig. 6.1,

(i) draw the normal at X,

(ii) draw the ray reflected from mirror 1,

(iii) mark the angle of incidence using the letter *i* and the angle of reflection using the letter *r*.

[3]

(b) Mirror 2 is parallel to mirror 1. The reflected ray from mirror 1 strikes mirror 2.

Compare the direction of the ray reflected from mirror 2 with the incident ray at X. You may do a further construction if you wish. Complete the sentence below.

The reflected ray from mirror 2 is .....

.....[1]

7 The speed of sound in air is 340 m/s.

(a) Complete Fig. 7.1 to show how far a sound wave has travelled 2, 3, 4 and 5 seconds after the sound was made. [1]

time elapsed/s	0	1	2	3	4	5
distance travelled/m	0	340				

Fig. 7.1

(b) On Fig. 7.2, draw the graph of distance travelled against time for the sound wave. [3]

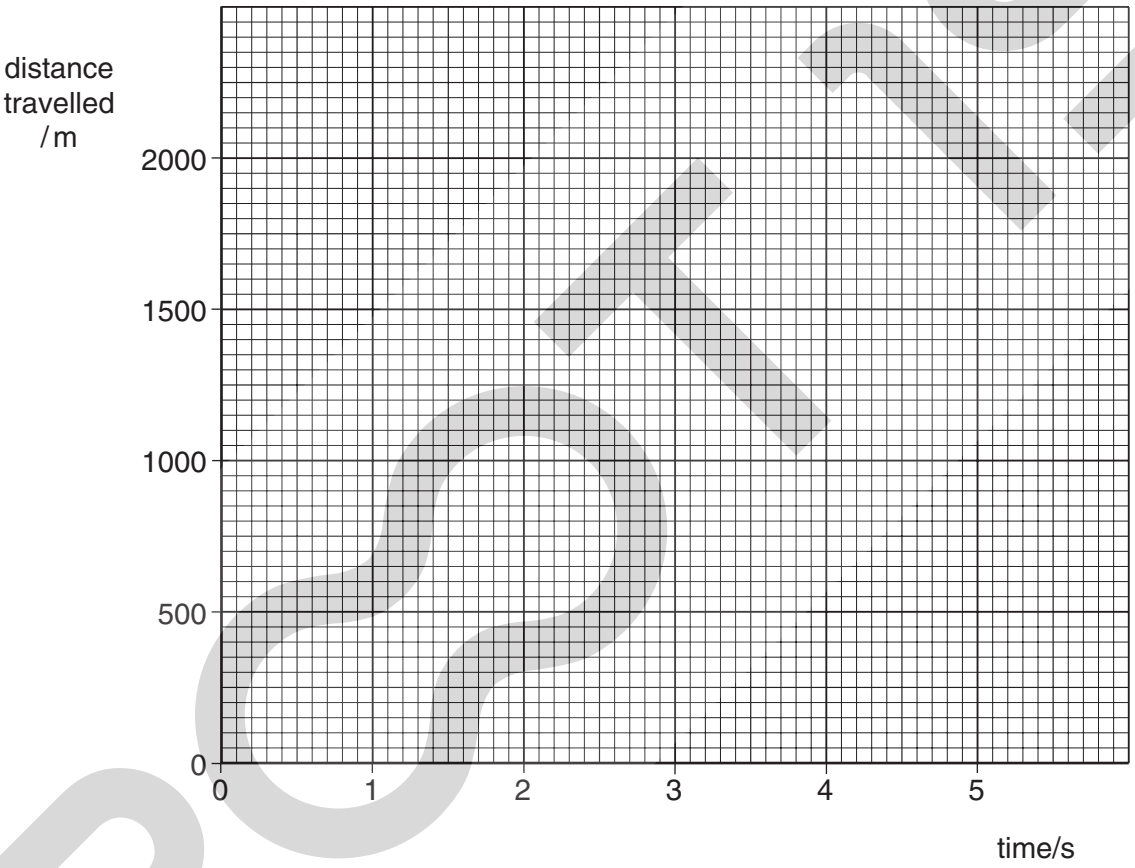

Fig. 7.2

(c) A ship is sinking in the dark as shown in Fig. 7.3.

Fig. 7.3

The sailors on the ship fire a distress flare into the air. It explodes with a bang and a bright flash of light.

(i) A lifeboat crew hear the bang and see the flash, but not at the same time.
State which reaches the lifeboat first, the bang or the flash, and give a reason.

.....

.....

.....

(ii) The time interval in **(c)(i)** is 4.2 s. Use your graph in **(b)** to find how far away the lifeboat is from the flare. Show clearly on your graph how you got your answer.

distance of lifeboat = ... m
[6]

For Examiner's Use

8 **(a)** In an electronic circuit, what is a capacitor designed to store? ..... [1]

(b) The circuit in Fig. 8.1 contains a large-value resistor and a capacitor.

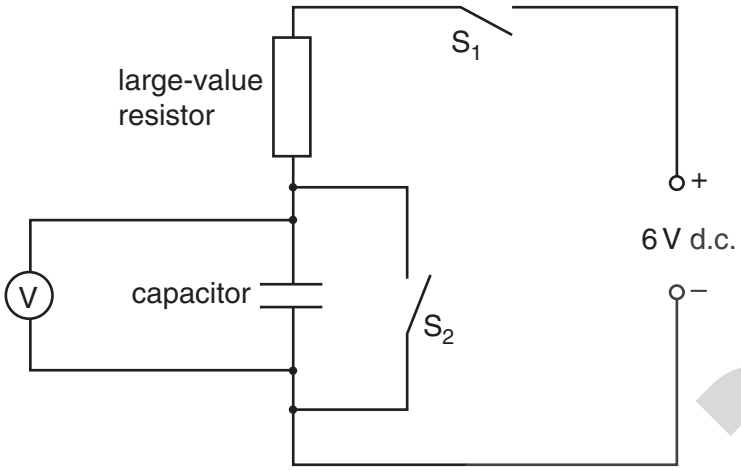

Fig. 8.1

(i) Switch S_1 is open. Switch S_2 is closed and then opened again.

What reading now shows on the voltmeter? V

(ii) S_2 is left open and S_1 is closed and left closed.

Describe what happens to the reading on the voltmeter.

.....

.....

(iii) The circuit in Fig. 8.1 is an example of a simple time-delay circuit.

State one use of a time-delay circuit.

.....

.....
[4]

9 A length of flexible, slack wire is fixed at A and B so that part of it is held vertically in the field of a horseshoe magnet, as shown in Fig. 9.1.

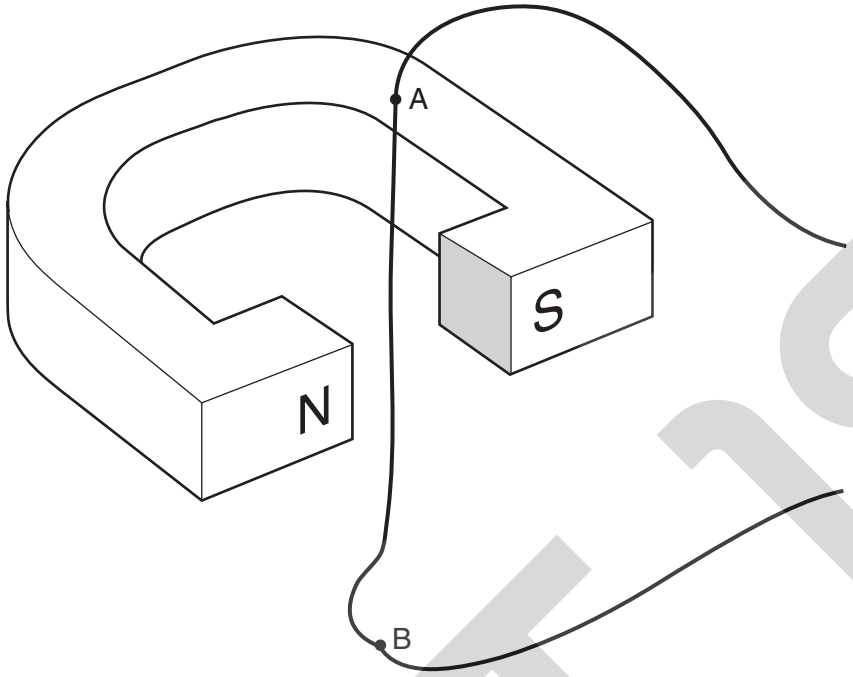

Fig. 9.1

Figs. 9.2 and 9.3 each show the same section through the apparatus. The wire between A and B is not shown.

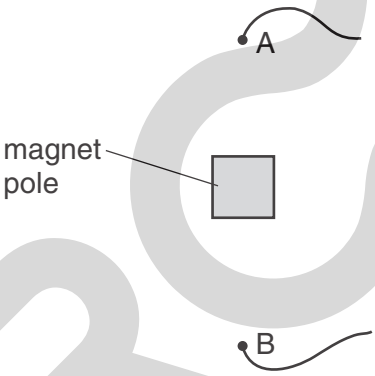

Fig. 9.2

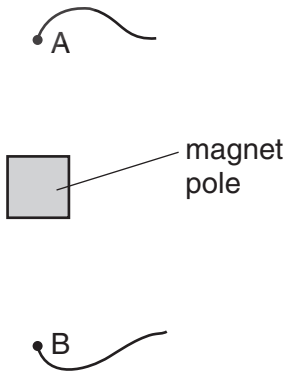

Fig. 9.3

(a) **(i)** On Fig. 9.2, draw what the wire might look like when a large current passes through it. [2]

(ii) Explain why the wire looks like this.

.....

.....[3]

(b) On Fig. 9.3, draw what the wire might look like if the current in **(a)** is reversed. [1]

10 Fig. 10.1 shows a simplified diagram of the front of a cathode-ray oscilloscope (c.r.o.).

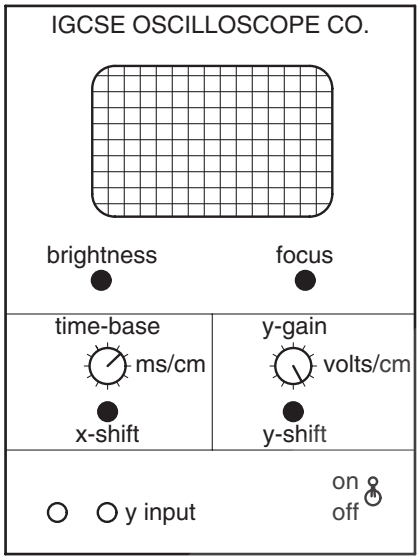

Fig. 10.1

(a) When the oscilloscope is switched on, a bright spot is seen at the centre of the screen.

(i) Describe what causes this bright spot.

.....

.....

.....

.....[3]

(ii) The spot is rather blurred. Which control should be adjusted to make it sharper?

.....[1]

(iii) Which control would be switched on to turn the spot into a horizontal line?

.....[1]

(iv) Describe what happens inside the oscilloscope to turn the spot into a horizontal line.

.....

.....

.....

.....[3]

(b) You have an alternating p.d. whose waveform you wish to display on the screen.

(i) Where would you connect this alternating p.d. to the oscilloscope?

.....

(ii) Fig. 10.2 shows what the trace on the screen might look like.

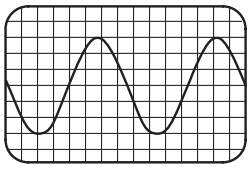

Fig. 10.2

1. What change would you see on the screen if you adjusted the x-shift control?

.....

2. What change would you see on the screen if you adjusted the y-shift control?

.....

[3]

root19

11 **(a)** Fig. 11.1 shows a circuit containing a lamp and a variable resistor.

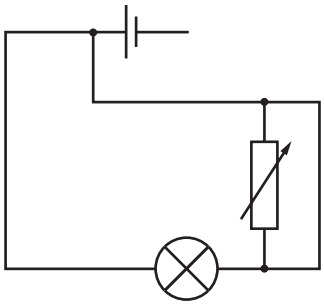

Fig. 11.1

The circuit does not work. The lamp does not light and altering the setting on the variable resistor makes no difference.

In the space below, re-draw the diagram, showing a circuit in which the variable resistor may be used to change the brightness of the lamp. [2]

root 19

For Examiner's Use

(b) Fig. 11.2 shows two resistors and an ammeter connected in series to a 6 V d.c. supply. The resistance of the ammeter is so small that it can be ignored.

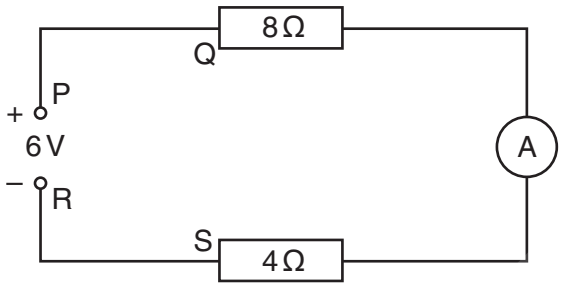

Fig. 11.2

(i) Calculate the combined resistance of the 8 Ω and 4 Ω resistors in series.

combined resistance = ... Ω [2]

(ii) **1.** Calculate the current supplied by the 6 V d.c. supply.

current = ...

2. State the value of the current

in section PQ of the circuit .....

recorded by the ammeter .....

in section SR of the circuit .....

[5]

(iii) On Fig. 11.2, show a voltmeter connected to measure the potential difference across the 4 Ω resistor. [1]

12 A rock climber climbs up a rock face, as shown in Fig. 12.1.

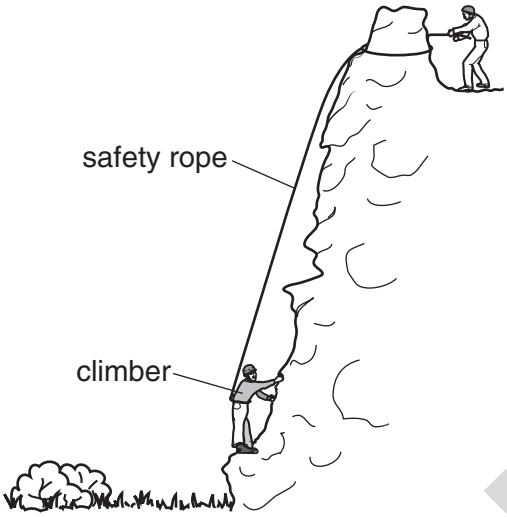

Fig. 12.1

(a) To climb the rock face, the climber must do work.
Which force must the climber work against as he climbs? Tick one box.

air resistance ☐

friction on the rock ☐

his weight ☐

tension in the safety rope ☐ [1]

(b) What other quantity, as well as the force ticked in **(a)**, must be known in order to find the work done by the climber?

.....[1]

(c) One climber weighs 1000 N and another weighs 800 N. They both take the same time to climb the cliff.

(i) Which one has done the most work? .....

(ii) Which one has the greater power rating? .....
[2]

(d) When the first climber reaches the top, he has more gravitational potential energy than he had at the bottom.

(i) What form of energy, stored in his body, was used to give him this extra gravitational potential energy? .....

(ii) Where did he get this energy from? .....

(iii) Other than increasing gravitational potential energy on the way up, how else was energy in his body used? State one way.

.....

.....
[3]